Gun Cart Dimensions

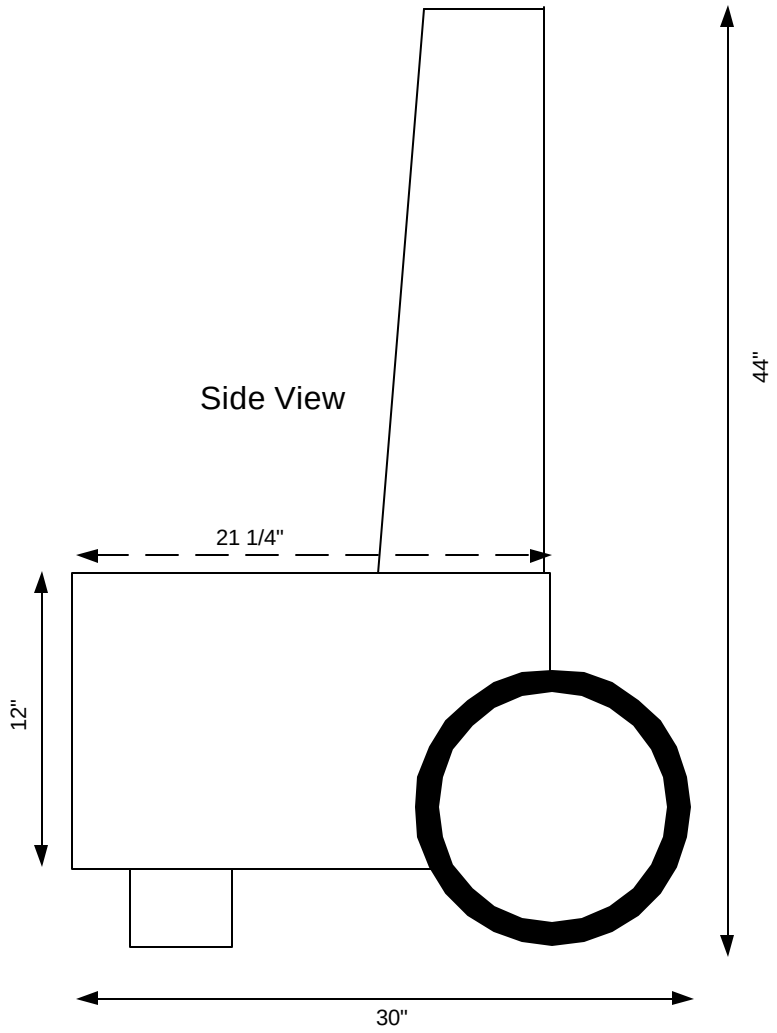

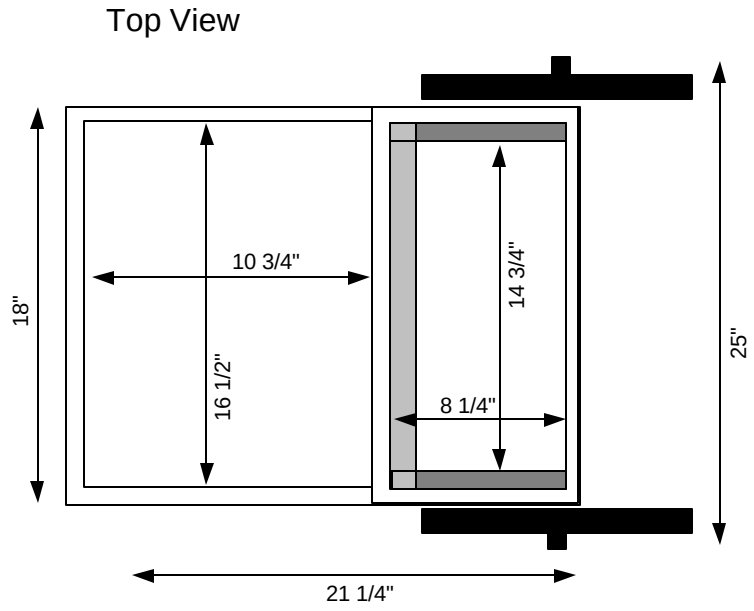

Copyright (C) 2001 Gateslinger #33751 (G. Lahti)
Not for commercial use or distribution.

Gun Cart Piece Dimensions

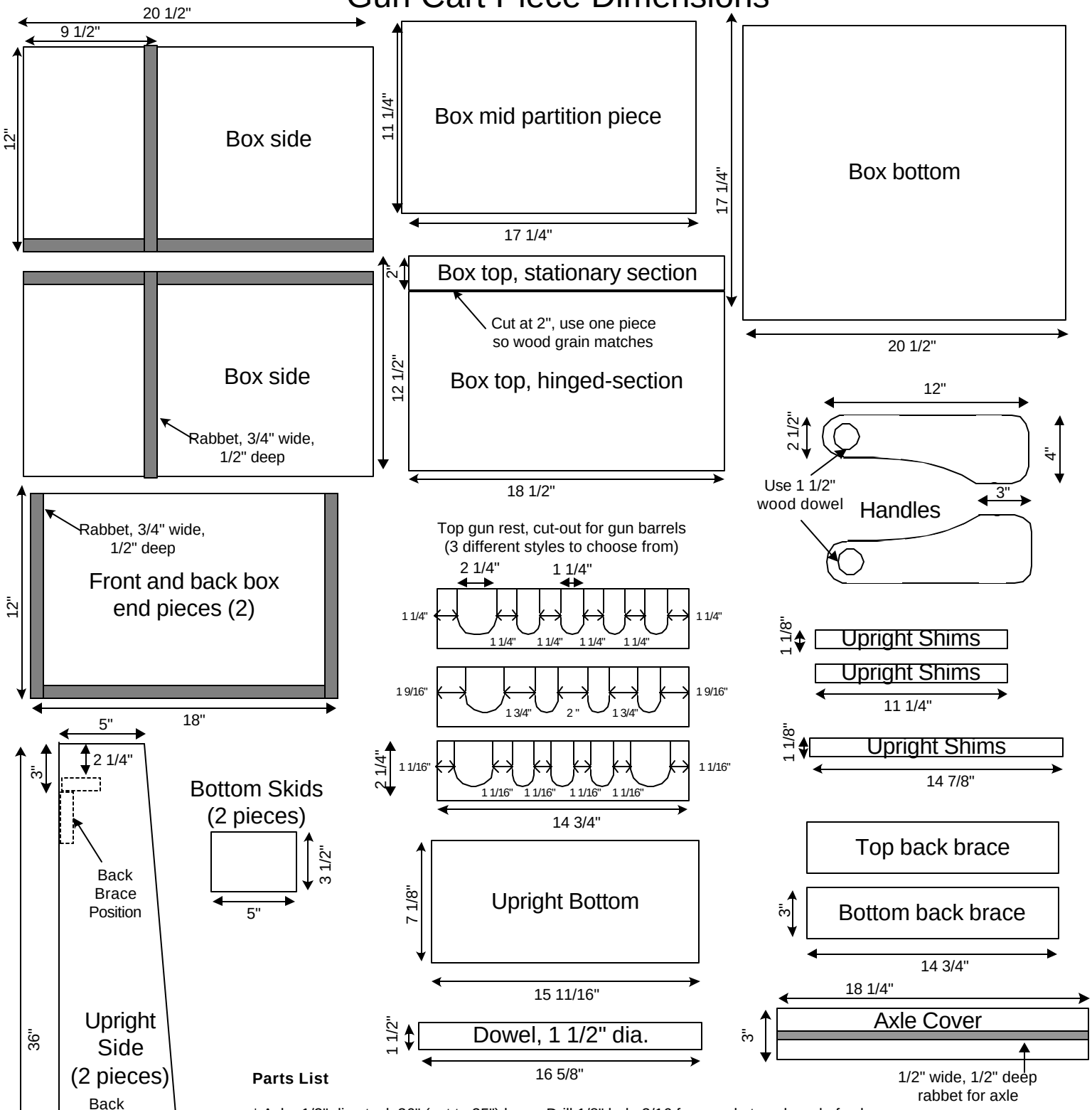

Parts List

* Axle, 1/2" dia stock 36" (cut to 25") long. Drill 1/8" hole 3/16 from end at each end of axle.
* (2) 1/2" Hitch Pins (purchased from Home Depot).
* (2) 1/2" nylon washers (goes between wheels & axle cover).
* Assorted drywall screws, 1 1/4" and 1 5/8" length.
* Wood glue.
* (2) 16" spoked ball-bearing wheels. Ordered from Northern Tool (www.northerntool.com), part #145124.
* Hinges. I used brass hinges from Lowes, but the screws sheared off upon install. Piano hinge works well.
* (2) 1/2" x 2" carriage bolts, (2) 1/2" washers, and (2) 1/2" wing nuts. Used to secure removable upright section to base box.
* 1 Cedar chest lock. Ordered from Rockler Woodworking and Hardware (www.rockler.com) part #28233.
* I Used (2) pieces of 2x4, 5" long for the front skids. Attached the 2x4 pieces with steel 2x4 stud hangers. Used (2) meta stud protectors on the bottom of the skids. Purchased these from Home Depot.
* Felt to line the gun barrel rest area. I made a pad to fit in the bottom for the gunstock butts as well. Cut a piece of 1/8" hardboard and 1/2" foam to fit, staple felt to back of hardboard.

Copyright (C) 2001 Gateslinger #33751 (G. Lahti)
Not for commercial use or distribution.